Datasheet for Cylinder HP170S57030S29E01

5 stage cylinder with trunnion mount & spherical eye

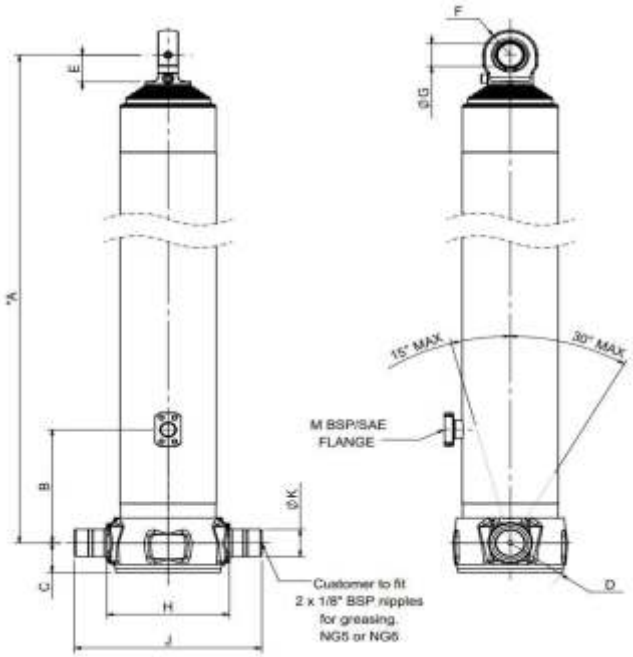

Final Stage Chrome Plated

Approx. weight 248kg

SPECIFICATION / TIPPING CAPACITY 28-41 TONNES

Stage	Tube Diameter *(mm)*	Length *(mm)*	Stroke *(mm)*	Swept Volume *(litres)*
Base	191	1660	----	-
1st Stage	169	1650	1438	32.3
2nd Stage	149	1650	1448	25.2
3rd Stage	129	1650	1448	18.9
4th Stage	110	1650	1448	13.8
5th Stage	91	1650	1248	8.1
		Total	7030	

TIPPING CAPACITY AT WORKING PRESSURE

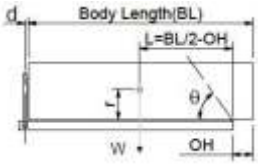

Bracket length d = 150

BL		9300			9100			8900	
OH	200	500	800	200	500	800	200	500	800
θ	45º	47º	49º	46º	48º	50º	48º	49º	52º
600	28	30	32	29	31	33	29	31	34
r 900	30	32	35	31	33	36	31	34	37
1200	32	35	38	33	36	39	34	37	41

Higher working pressures and tipping capacities may be possible.
To check your application email - applications@edbro.co.uk

APPLICATION INFORMATION

Working Pressure	161	bar	Swept Oil Volume	98.3 litres
Maximum Pressure	250	bar	Priming Volume	7.6 litres
Maximum 1st Stage Thrust	265	kN	Total Volume	105.9 litres

DIMENSIONS

A	1728.5	mm	D	123	mm	ØG	50.025 50.000	mm	ØK	60.00 59.90	mm			
B	290	mm	E	58	mm	H	245	mm						
C	65	mm	F	55	mm	J	375	mm	M	1" SAE / G1"				

Notes

1. This cylinder is intended for lifting purposes only and side load conditions should be avoided.
2. Cylinder is painted in primer to RAL9005
3. Refer to www.edbro.com for:-
   - Bracket details
   - Installation instructions that must be observed
   - Correct oil selection
   - An explanation of tipping capacity

Edbro

Hoppe-Truck-Hydraulik GmbH & Co.KG
Püsselbürener Damm 244, 49479 Ibbenbüren
Tel.: +49 (0) 5451-50230320, Fax: +49 (0) 5451-50230348
Email: info@hoppe.parts Web: www.hoppe.parts

HTH HOPPE PARTS

HP170S57030S29E01 Spare Parts Diagram

5 stage cylinder with trunnion mount & spherical eye

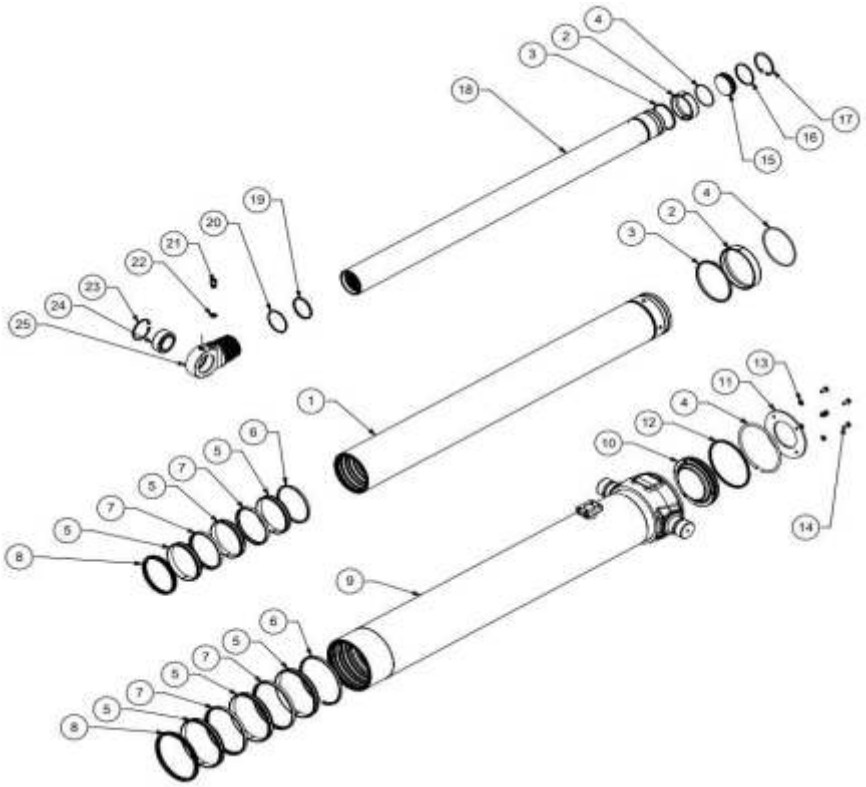

PARTS	REF	PART NUMBERS						
Base tube	9	HPBA191S29011660						
		1st Stage	**2nd Stage**	**3rd Stage**	**4th Stage**	**5th Stage**		
Inters	1	HPIN1690011650	HPIN1490011650	HPIN1290011650	HPIN1100011650			
Small Inner	18	HPSI091E0011650C						
Seal Kit		SKPB175/01	(SEALS ARE SOLD AS A KIT ONLY - INDIVIDUAL PARTS ARE UNAVAILABLE)					
		Base tube	**1st Stage**	**2nd Stage**	**3rd Stage**	**4th Stage**	**5th Stage**	**6th Stage**
Main Seals	7	SAM169/12	SAM149/12	SAM129/12	SAM110/12	SAM91/12		
Head Bearings	5	BRH169/12	BRH149/12	BRH129/12	BRH110/12	BRH91/12		
Wiper Seal	8	EWM169/12	EWM149/12	EWM129/12	EWM110/12	EWM91/12		
Base Pad Seal	12	OR161/5.33/N/70	OR161/5.33/N/90/AE					
Blanking Plug Seal	16	OR71/2.62/N/70	OR71/2.62/N/90/AE					
Cross Head Seals	19 & 20	OR73/3.53/N/70	OR69/3.53/N/70	OR69/3.53/N/90/AE				
		Base tube	**1st Stage**	**2nd Stage**	**3rd Stage**	**4th Stage**	**5th Stage**	**6th Stage**
Spring washer	13	WS550/M8/ZP						
Bolts	14	BM8/C/20/12.9/ZP						
Snap Ring	4	SRM175/02	SRM155/01	SRM135/01	SRM116/01	SRM97/01	SRM78/05	
Internal Stop Ring	6	SRM180/07	SRM159/07	SRM139/07	SRM119/07	SRM81/07		
External Stop Ring	3		SRM163/06	SRM144/06	SRM124/06	SRM106/06	SRM87/06	
Slider Bearing	2		BRS169/02	BRS149/02	BRS129/02	BRS110/02	BRS91/02	
Locking Screw		KE74						
Cross Head	25	RCE91/01						
Bearing	24	BJ37						
Circlip	23	PS149/75						
Bleed Plug	21	PA39						
Dowty Washer	22	DPP45B/SC						
Base pad	10	RBM191/01						
Base Pad Ring	11	BPR191/01						
Blanking Plug	15	EC91/01						
Blanking Plug Clip	17	PS149/80						

Edbro
Edbro House, Nelson Street, Bolton, BL3 2JJ, UK
Tel +44 (0) 1204 528888 Fax +44 (0) 1204 531957
Email: sales@edbro.com Web: www.edbro.com

Technical Specifications are subject to change without notice
Date Created/Updated: 08/01/24
Refer www.edbro.com to confirm latest specification
All dimensions are in mm, unless otherwise stated