Datasheet for Cylinder HP170S55730S70A08

5 stage cylinder with trunnion mount & spherical eye

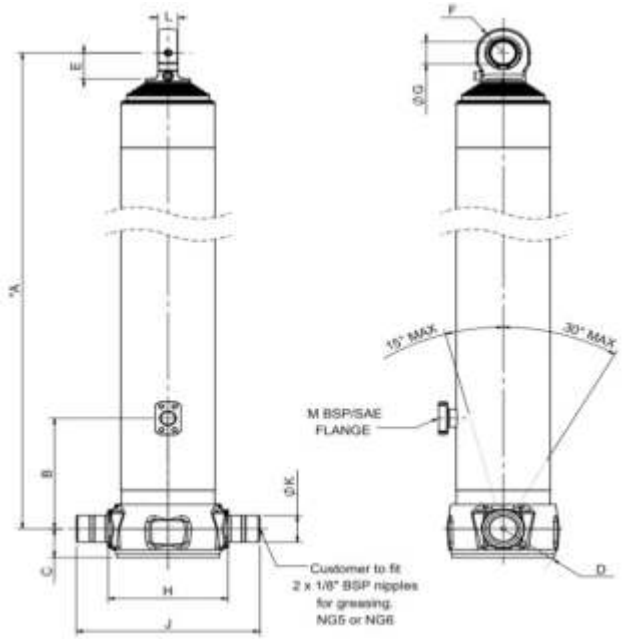

Final Stage Chrome Plated

Approx. weight 229kg

SPECIFICATION — TIPPING CAPACITY 34-58 TONNES

Stage	Tube Diameter *(mm)*	Length *(mm)*	Stroke *(mm)*	Swept Volume *(litres)*
Base	191	1360	----	-
1st Stage	169	1350	1138	25.5
2nd Stage	149	1350	1148	20
3rd Stage	129	1350	1148	15
4th Stage	110	1350	1148	10.9
5th Stage	91	1525	1148	7.5
		Total	5730	

TIPPING CAPACITY AT WORKING PRESSURE

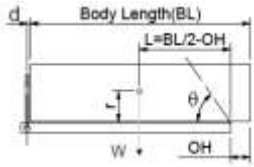

Bracket length d = 150

BL		7900			7550			7200		
OH		200	500	800	200	500	800	200	500	800
θ		44°	45°	47°	46°	48°	50°	48°	51°	53°
	600	34	37	40	35	38	42	36	40	45
r	900	36	39	44	38	42	47	40	44	51
	1200	39	43	48	41	46	52	43	49	58

Higher working pressures and tipping capacities may be possible.
To check your application email - applications@edbro.co.uk

APPLICATION INFORMATION

Working Pressure	194	bar	Swept Oil Volume	78.9 litres
Maximum Pressure	250	bar	Priming Volume	6.1 litres
Maximum 1st Stage Thrust	250	kN	Total Volume	85.1 litres

DIMENSIONS

A	1604	mm	D	123	mm	ØG	50.025 50.000	mm	ØK	60.00 59.90	mm			
B	700	mm	E	58	mm	H	245	mm	L	40	mm			
C	65	mm	F	55	mm	J	375	mm	M	1" SAE / G1"				

Notes

1. This cylinder is intended for lifting purposes only and side load conditions should be avoided.
2. Cylinder is painted in primer to RAL9005
3. Refer to www.edbro.com for:-
   - Bracket details
   - Installation instructions that must be observed
   - Correct oil selection
   - An explanation of tipping capacity

Hoppe-Truck-Hydraulik GmbH & Co.KG
Püsselbürener Damm 244, 49479 Ibbenbüren
Tel.: +49 (0) 5451-50230320, Fax: +49 (0) 5451-50230348
Email: info@hoppe.parts Web: www.hoppe.parts

HP170S55730S70A08 Spare Parts Diagram

5 stage cylinder with trunnion mount & spherical eye

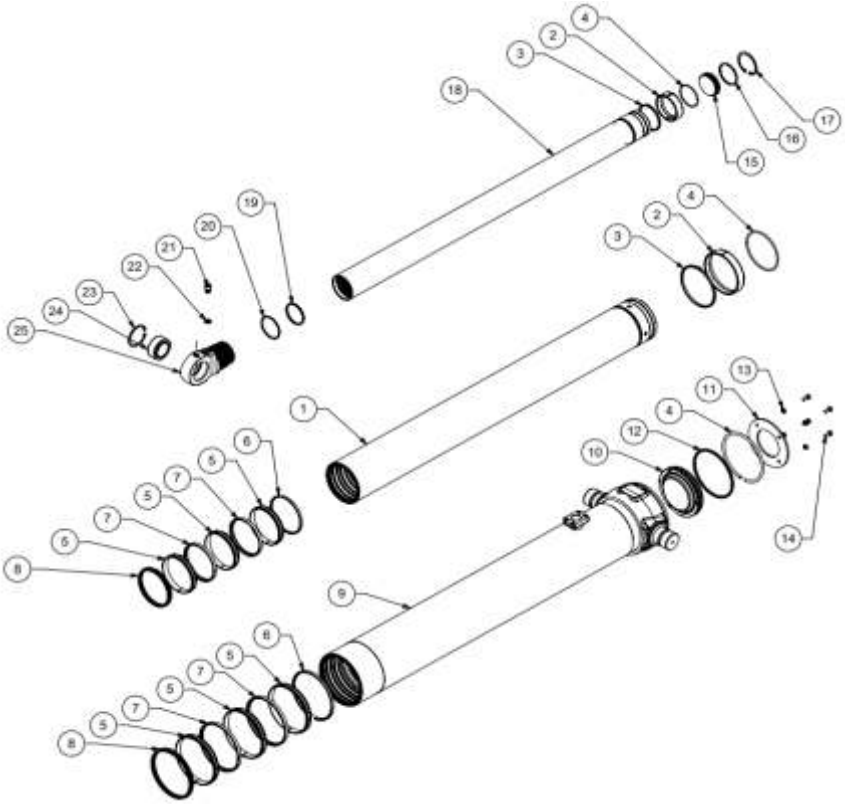

PARTS	REF	PART NUMBERS						
Base tube	9	HPBA191S70011360						
		1st Stage	2nd Stage	3rd Stage	4th Stage	5th Stage		
Inters	1	HPIN1690011350	HPIN1490011350	HPIN1290011350	HPIN1100011350			
Small Inner	18	HPSI091A0011525C						
Seal Kit		SKPB175/01	(SEALS ARE SOLD AS A KIT ONLY - INDIVIDUAL PARTS ARE UNAVAILABLE)					
		Base tube	1st Stage	2nd Stage	3rd Stage	4th Stage	5th Stage	6th Stage
Main Seals	7	SAM169/12	SAM149/12	SAM129/12	SAM110/12	SAM91/12		
Head Bearings	5	BRH169/12	BRH149/12	BRH129/12	BRH110/12	BRH91/12		
Wiper Seal	8	EWM169/12	EWM149/12	EWM129/12	EWM110/12	EWM91/12		
Base Pad Seal	12	OR161/5.33/N/70	OR161/5.33/N/90/AE					
Blanking Plug Seal	16	OR71/2.62/N/70	OR71/2.62/N/90/AE					
Cross Head Seals	19 & 20	OR73/3.53/N/70	OR69/3.53/N/70	OR69/3.53/N/90/AE				
		Base tube	1st Stage	2nd Stage	3rd Stage	4th Stage	5th Stage	6th Stage
Spring washer	13	WS550/M8/ZP						
Bolts	14	BM8/C/20/ZP						
Snap Ring	4	SRM175/02	SRM155/01	SRM135/01	SRM116/01	SRM97/01	SRM78/05	
Internal Stop Ring	6	SRM180/07	SRM159/07	SRM139/07	SRM119/07	SRM81/07		
External Stop Ring	3		SRM163/06	SRM144/06	SRM124/06	SRM106/06	SRM87/06	
Slider Bearing	2		BRS169/02	BRS149/02	BRS129/02	BRS110/02	BRS91/02	
Locking Screw		KE74						
Cross Head	25	RCE91/01						
Bearing	24	BJ37						
Circlip	23	PS149/75						
Bleed Plug	21	PA39						
Dowty Washer	22	DPP45B/SC						
Base pad	10	RBM191/01						
Base Pad Ring	11	BPR191/01						
Blanking Plug	15	EC91/02						
Blanking Plug Clip	17	PS149/80						

Hoppe-Truck-Hydraulik GmbH & Co.KG
Püsselbürener Damm 244, 49479 Ibbenbüren
Tel.: +49 (0) 5451-50230320, Fax: +49 (0) 5451-50230348
Email: info@hoppe.parts Web: www.hoppe.parts