Cylinder 5 stage front end with outer cover

CS17L057483B19A11

**ALLOW 50mm TO REMOVE CAP FOR SERVICING

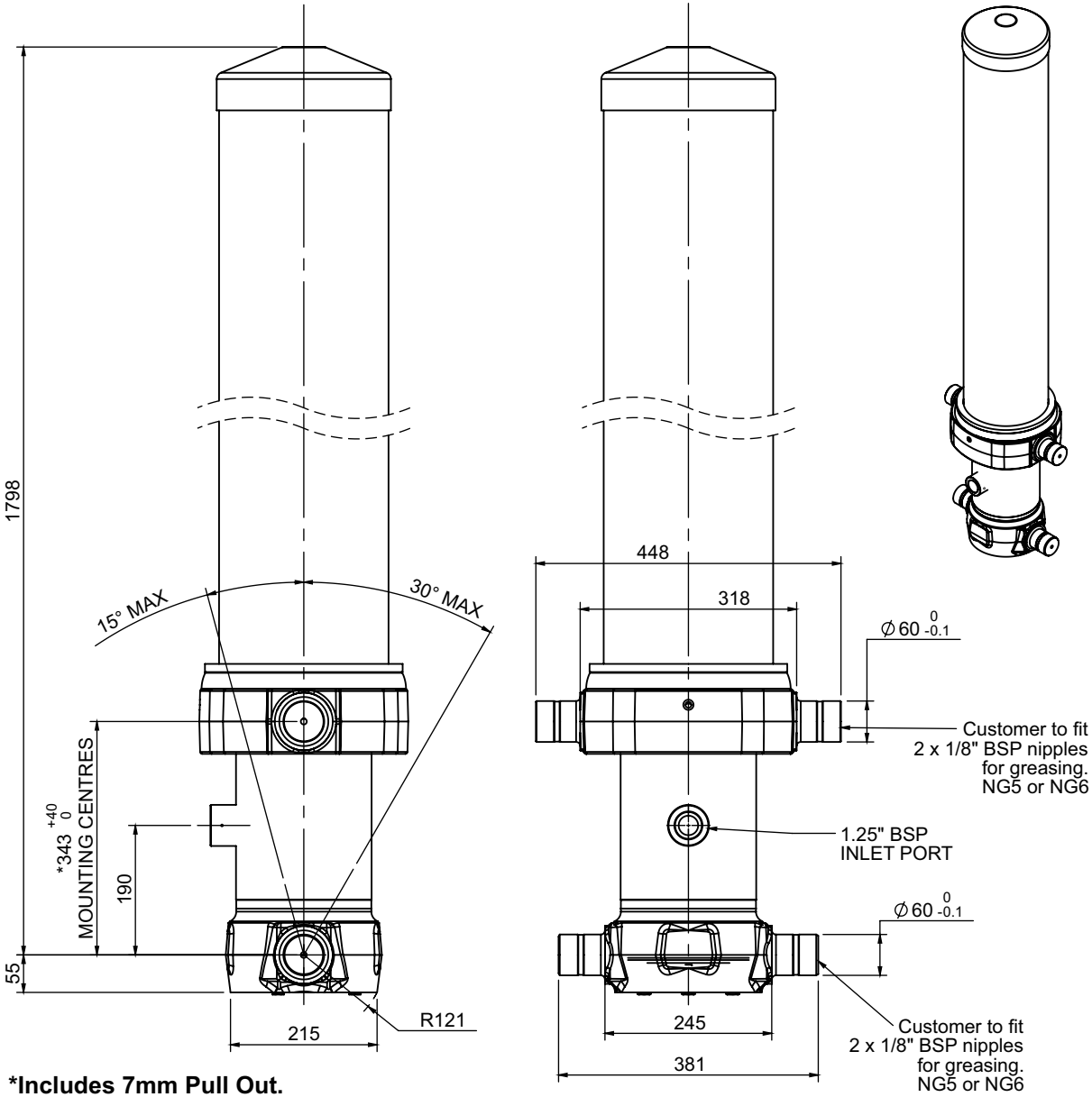

***Includes 7mm Pull Out.**

SPECIFICATION		TIPPING CAPACITY : 33-44 TONNES***		
Stage	Diameter	Length	Stroke	Swept Volume
OUTER COVER	248	1420	-	-
0	199	1725	-	-
1	176	1690	1470	36
2	155	1690	1487	28
3	136	1690	1497	22
4	117	1690	1512	16
5	98	1690	1517	11
		Total (+5/-10)	7483	113
Final stroke reduced by	0	Priming Volume		23.8
Cylinder Mass (Kg)	314	Total Volume (Litres)		136.8
Maximum Pressure (Bar)	190	Max. first stage thrust		200 KN

***TIPPING CAPACITY AT WORKING PRESSURE

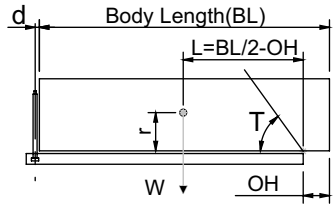

BODY LENGTH (BL)						OH
8750		9250		9750		
36	50°	34	47°	33	45°	150
40	52°	37	49°	35	47°	450
44	54°	40	51°	38	48°	750

d = 229; r = 900; Working Pressure 150 bar

Tipping angle (T)

Body + payload mass,W (tonne)

NOTES

1. This cylinder is for lifting purposes only and side load conditions should be avoided
2. Cylinder is painted in primer paint to RAL9005

Edbro

Hoppe-Truck-Hydraulik GmbH & Co.KG
Püsselbürener Damm 244, 49479 Ibbenbüren
Tel.: +49 (0) 5451-50230320, Fax: +49 (0) 5451-50230348
Email: info@hoppe.parts Web: www.hoppe.parts

HTH HOPPE PARTS